DentalEZ®

# Simplicity® Cart

Duo

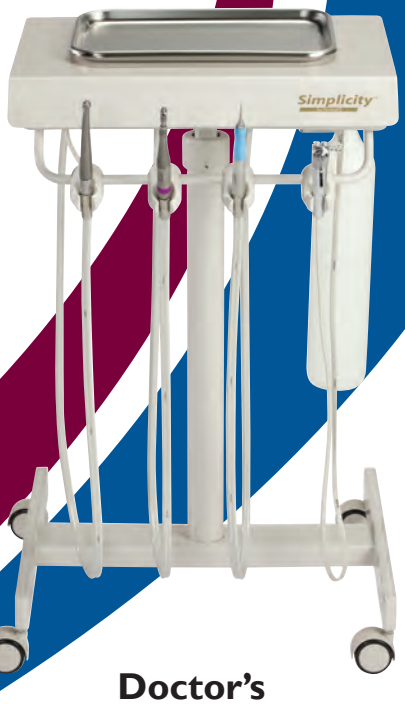


Doctor's

## Installation, Operation & Care Manual

# Table of Contents

DentalEZ


## Section I Introduction

Specifications ..... 2
Classifications ..... 2
Explanation of Symbols & Signs ..... 3
Dimensions ..... 3
Explanation of Packaging Symbols ..... 4
Packaging ..... 4

## Section II Pre-installation

Utility Service Center ..... 5
Plumbing Contractor's Procedure ..... 5-6
Electrical Contractor's Procedure ..... 6

## Section III Installation

USC Base ..... 7
Umbilical Connection ..... 7
Cart Leveling ..... 8
Cart Lid ..... 8
Assistant's Accessories ..... 8
Fiber Optics - Electrical (Optional) ..... 9
Syringe Tubing ..... 9
Explanation of Control Symbols ..... 9

## Section IV Testing

Delivery System ..... 10
Foot Control & Handpiece ..... 10-11
Syringe ..... 11
Fiber Optics (Optional) ..... 11

## Section V Operation

Delivery System ..... 12
Handpiece ..... 13
Syringe ..... 14
Foot Control / Chipblower ..... 14
Fiber Optics (Optional) ..... 14
Clean Water System ..... 14

## Section VI Care

Cleaning ..... 15
Disinfecting ..... 15

## Section VII User Service Information

Delivery Head ..... 16
Handpiece ..... 17-18
Service Instruction ..... 18
Disposal of Equipment ..... 18

## Section VIII Parts List / Diagrams

Utility Service Center ..... 19
Delivery Head / Clean Water System ..... 20
Manifold ..... 21
Control Block ..... 21
Cart Replacement Parts ..... 22
Foot Control ..... 22
Air / Water Syringe ..... 23
HVE Nozzle ..... 23
SE Nozzle ..... 23

## Limited Warranty ..... 24

## EMC Information ..... 25-28

## Tubing Diagram

This manual contains installation, operation and care instructions and user service information for the Simplicity® Cart Delivery Unit.

The Simplicity Cart is available in two standard configurations: (1) Duo (doctor's and assistant's) instrumentation and (2) doctor's only instrumentation.

The Simplicity Cart Delivery Unit is intended to be used by trained professional dental care personnel as an interface device to connect the dental operatory hand instruments to the appropriate supply utility such as air, water, vacuum, drain and electrical. It functions as a system management device that provides a method of operating the hand instruments from a single control input device.

The Simplicity cart, situated on wheels, positions the handpieces for the optimum presentation to the operator.

The Unit is designed to provide trouble-free service when installed, operated and maintained according to the procedures set forth in this manual.

To ensure correct installation, carefully read all the procedure instructions contained in this manual paying close attention to all notices, notes, cautions and warnings.

Before proceeding, please review the photo below to become familiar with the basic components of the Unit.

After the Simplicity Cart is installed, please review the operation procedures and care guidelines with the doctor's staff. Then **leave this manual in the doctor's office** for future reference.

**BASIC COMPONENTS**

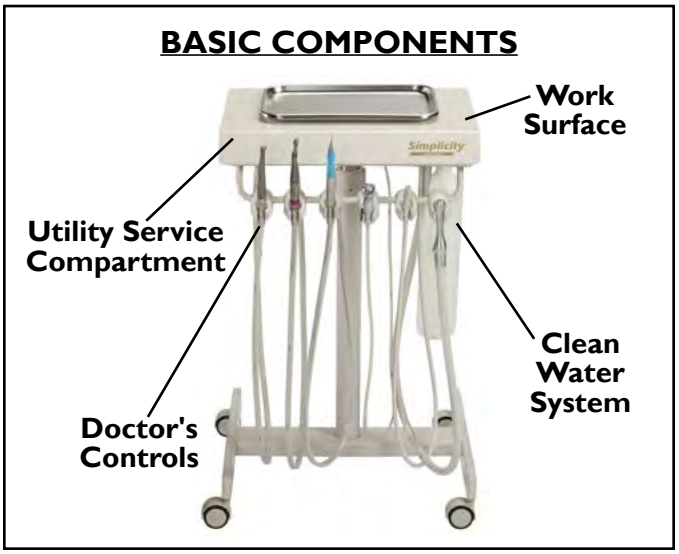


## Specifications

These specifications apply to model SP-A (doctor's only instrumentation) and model SP-B (doctor's and assistant's instrumentation).

**Power Supply** - 100-240V, 50-60 Hz., as applicable

**Air Pressure** - 551.6 pKa (80 PSI)
*(at regulator in USC)*

**Water Pressure** - 275.8 pKa (40 PSI)
*(at regulator in USC)*

**Clean Water System** - Reservoir Capacity - 1.5 L

**CMU Shipping Weight**

Cart with transformer - 61.2 kg (135 lbs.)
Cart without transformer - 47.6 kg (105 lbs.)

**Maximum Load for Cart Top** - 0.453 kg (10 lbs.)

**Recommended Environmental Conditions**

– Environmental conditions for transport and storage:
  - Relative humidity range within 0% to 95%
  - Transport/storage temp. within -29°C (-20°F) to 74°C (165°F)
– Environmental conditions for operation:
  - Conditioned Air
  - Atmospheric pressure range within 500 to 1050 kPa
  - Operation temp. within 15°C (59°F) to 27°C (80°F)

**Air and Water Inlet Temperature Range:**
5°C (41°F) to 27°C (80°F)

**⚠ CAUTION**

Temperatures not within the air and water inlet termperature range could cause damage to the unit.

## Classifications

CLASSIFIED C UL US 53HN

Medical - General Medical Equipment
Certified as to electrical shock, fire and mechanical hazards only in accordance with UL 60601-1, CAN/CSA-C22.2 No. 601.1, CAN/CSA-C22.2 No. 60601-1 (2008) & ANSI/AAMI ES 60601-1 (2005).

CE 0459

– Type of protection against electric shock: Class 1 Equipment
– Degree of protection against electric shock: Type B Applied Parts. *The handpiece is considered an applied part.*
– Degree of protection against the ingress of water: Ordinary
– Equipment not suitable for use in the presence of a flammable anesthetic mixture with air or with oxygen or nitrous oxide.
– Mode of operation: Continuous

The authorized European representative is:
DentalEZ (GB) Ltd., Cleveland Way
Hemel Hempstead, Hertfordshire, HP2 7DY, England
Phone: (01442) 269301
Attn: Mr. Jeff Whitehouse

## Explanation of Symbols and Signs:

= Caution

= Warning

= Biohazard

= Warning Dangerous Voltage

= Alternating Current

= Direct Current

= Type B Applied Part

= Protective Earth (ground)

= General Mandatory Action

= Refer to Manual (follow instructions)

= European Certification

SN = Serial Number

= Manufacture Date

= Manufacturer

## NOTICE

- In accordance with Part 15 of FCC rules, this equipment was tested and complies with Class A digital device limits. These limits are designed to give equipment reasonable protection against detrimental interference when operated in a commercial environment.
- Medical electrical equipment needs special precautions regarding electromagnetic compatibility (EMC) and needs to be installed according to EMC information. *(See EMC Information, Pages 25 through 28.)*
- Mobile radio frequency (RF) communications equipment can affect medical electrical equipment.

## Dimensions

### UNIT FRONT

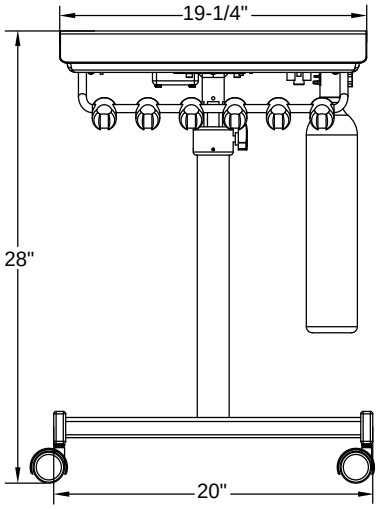


### UNIT SIDE

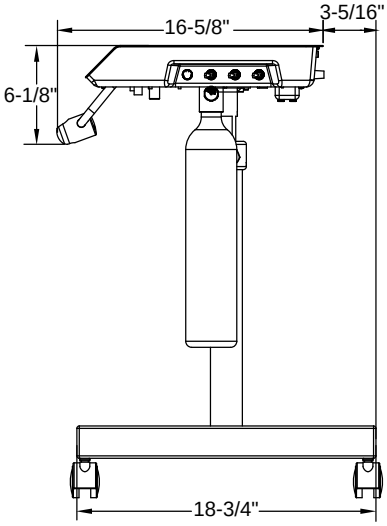


### UNIT TOP

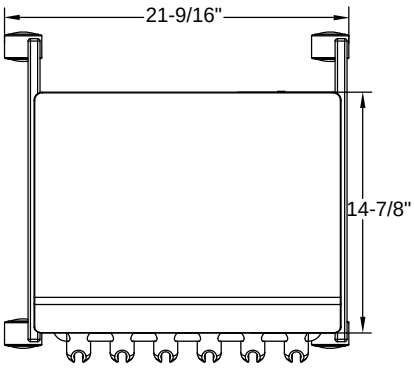

**WARNING**

Do not position equipment so that it is difficult to unplug the unit from the power receptacle.

**WARNING**

Do not modify the Simplicity Cart without permission from DentalEZ.

**NOTICE**

Installation by an authorized DentalEZ dealer service technician is recommended.

**NOTICE**

For any questions about an order, please contact a DentalEZ Equipment customer service representative at **1-866-DTE-INFO**.

## Explanation of Packaging Symbols:

= Box Must Remain Upright

= Do Not Place Box On Unlevel Surface

= Do Not Stack Box

= Box Contents Safe Temperature Range

= Box Contents Safe Humidity Range

## Packaging

The Simplicity Cart Delivery Unit components are packaged and shipped according to the shipping configurations on this page.

**NOTE**: *Be aware that some cartons are shipped with packing inserts that may be empty (even if optional components are ordered).*

Please verify the Simplicity Cart components packaging contents against the packing list.

All parts supplied are necessary for proper installation, so be sure not to discard any hardware or components until installation is complete.

**SHIPPING CONFIGURATION**

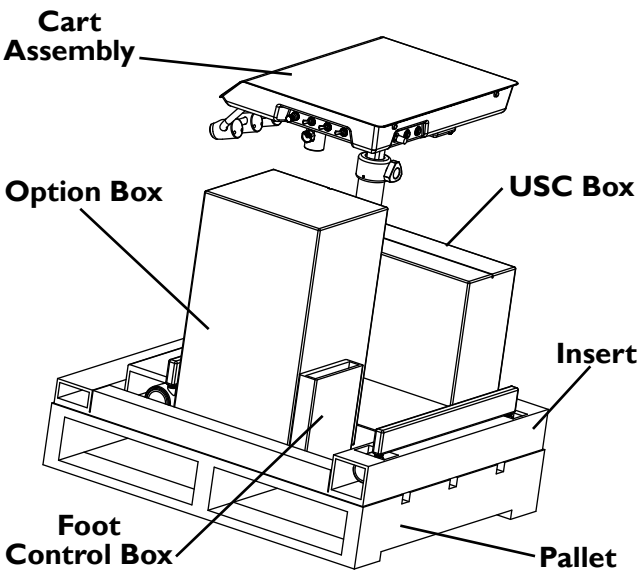


## Simplicity Cart Unit Carton Contents:

- Cart Assembly
- Utility Service Center (USC) Box
- High-volume Evacuator (HVE) & Saliva Ejector (SE) Components (Duo only)
- Utility Components (if ordered)
- Literature Assembly
- Utility Supply Bag:
  - Elbow Fitting
  - Adaptor Fitting
  - 90 Deg. Valves (2)
  - Adaptors (2)
  - Fitting Assembly
  - #10 x 1/2 Screws (4)
  - Actuator Valve Assembly
- Assistant's Arm Supply Bag (Duo only):
  - HVE Aseptic Sterling Tubing
  - SE Sterling Tubing
  - HVE Handle Valve
  - SE Handle Valve
  - Disposable Solid Trap Pkg. Assembly

## Utility Service Center

### USC Carton Contents:

- Utility Service Center (USC)
- USC cover
- USC base (floor plate)
- USC Template
- Bag of supplies:
  - Two #6 x 3/8" screws
  - Four #10 screws
  - Two adaptors
  - Four plastic anchors
  - 1/8" tubing barb
  - Plug cap
  - Two 1/8" tubing clamps
  - Five 1/4" tubing clamps
  - Elbow assembly
  - Elbow fitting
  - Four 6-32 x 1/2" screws
  - Four 6-32 nuts
  - Pin housing, three position
  - Two coupler fittings
  - Air fitting assembly
  - Two stop valves
  - Water actuator valve assembly
  - Washer

**NOTE:** *Set the USC cover aside until all installation and testing is complete.*

1. Remove the full-size USC template found in the USC Carton.
2. Position the USC template according to the exact layout indicated, making certain correct distance from base to chair is maintained.
3. Using the USC template, drill two mounting holes for the USC base. *But* **do not** *secure the base to the floor at this time.*

**NOTE:** *For wood or metal floors, drill 5/32" holes. For concrete, drill 1/4" holes and install plastic anchors.*

**NOTICE**

**DO NOT DISCARD** the USC template after use. Neatly refold it and place it in the back of this manual.

**⚠ WARNING**

Before proceeding with plumbing installation, comply with and maintain all applicable utility codes and regulations.

**NOTICE**

For reference, a color-coded tubing diagram is included with this manual.

## Plumbing Contractor's Procedure

1. Open the USC bag of supplies.
2. Using the USC template, stub the utilities through the floor and **orient as shown in the template**. *(Vacuum and drain fittings not supplied. Refer to the USC template for requirements.)*

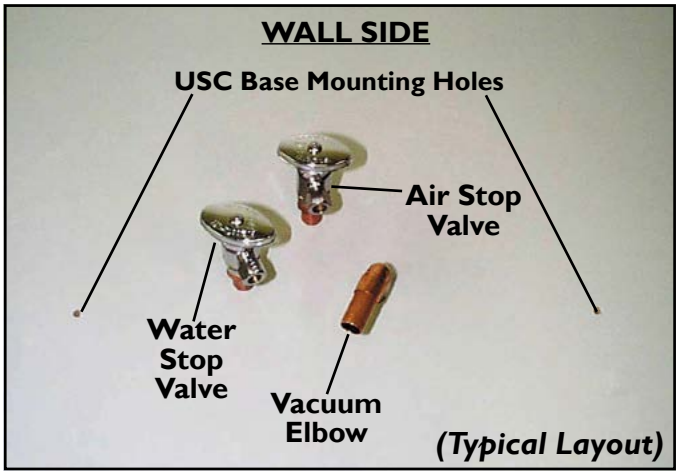

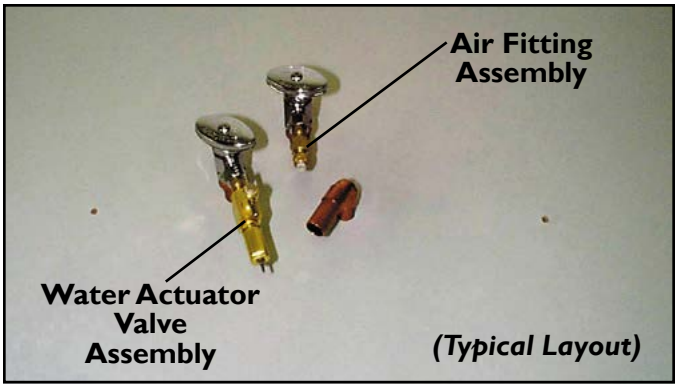


**NOTE:** *Pay close attention to the orientation of the template to the wall.*

3. Sweat the valve adaptors to the air and water stubs.
4. Apply the appropriate thread sealant to the valve adaptors and install the stop valves.
5. Sweat the vacuum elbow to the stubs.
6. Sweat the hose connectors to the elbows as applicable and **orient as shown in the template**.
7. Flush the air and water lines to remove trash and debris from the lines.
8. Connect the water actuator valve assembly to the water stop valve as shown in the template. Using a 5/8" open-end wrench, tighten the nut securely.
9. Connect the air fitting assembly to the air stop valve as shown in the template. Using a 5/8" open-end wrench, tighten the nut securely.

## Electrical Contractor's Procedure

**WARNING**

Before proceeding with electrical installation, all wiring must be in accordance with NEC and local electrical codes.

**WARNING**

To avoid the risk of electrical shock, this equipment must only be connected to a supply mains with protective earth.

**WARNING**

Do not connect items that are not part of the system to the cart.

**WARNING**

Only use power supplies that are supplied by DentalEZ as part of the Simplicity Cart.

**CAUTION**

Rating of main circuit breakers should be 20 Amp maximum.

**NOTICE**

Isolating the unit from the supply mains is accomplished by unplugging the unit from the power receptacle.

**NOTICE**

Electrical contractor's parts are **not** supplied.

The electrical contractor is to provide a covered 115/220 VAC receptacle which meets all applicable utility codes and regulations.

For the recommended location of the 115/220 VAC receptacle, see the USC template.

**NOTE:** *If the recommended location is not met, the USC base may interfere with the 115/220 VAC receptacle.*

## USC Base

1. Position the USC base over the two mounting holes that were drilled during pre-installation.
2. Secure the base using two #10 screws.

## Umbilical Connection

### NOTICE

- Before making tubing connections, use soap to **lubricate** all in-line barbs and lines.
- After making each connection, **secure** by sliding an appropriate size tubing clamp over the barb/tube connection.

1. Attach the **red incoming air pressure line** to the air fitting assembly using the compression fitting supplied.

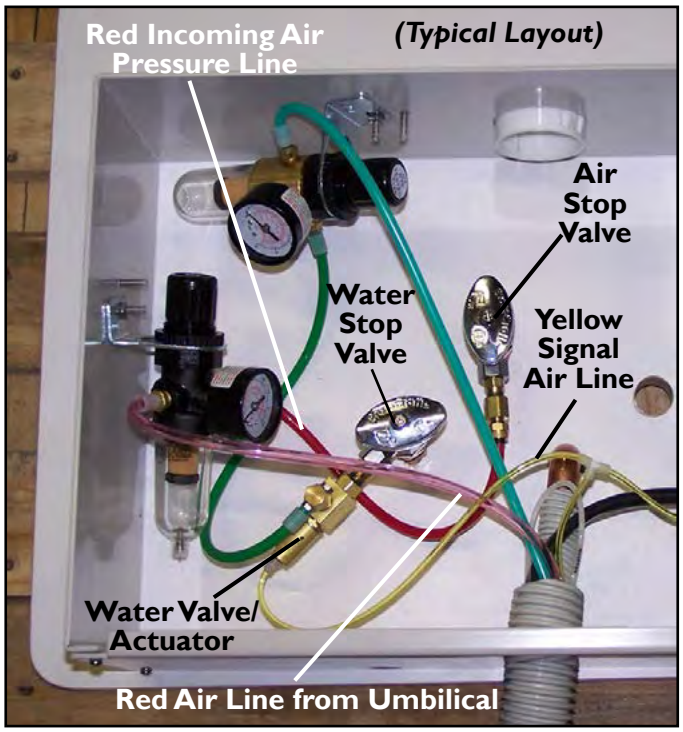


2. Slide a 1/4" tubing clamp onto the **red air line from the umbilical**. Connect this line to the remaining 1/4" barb on the air regulator assembly.

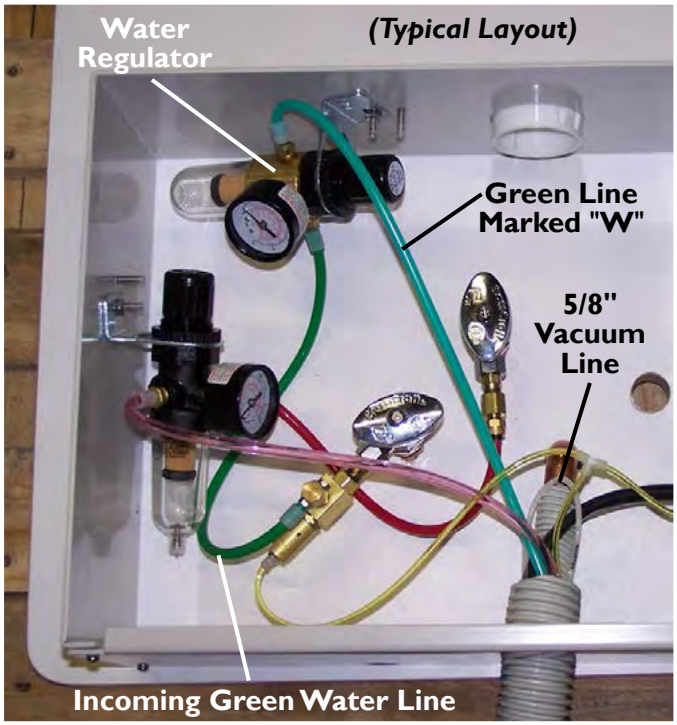


3. Trim the **5/8" vacuum line**. Then install the **5/8" vacuum line** on the vacuum elbow.
4. Slide a 1/8" tubing clamp onto the **yellow signal air line** from the umbilical. Connect this line to the water valve/actuator.
5. Open the air stop valve and check for leaks.

### NOTICE

If the city water option was ordered, follow the instructions included with the kit.

## Cart Leveling

1. Make sure the cart is on a level floor *(Move the cart to a level location if necessary.)*
2. Close the top cover of the cart. Then check the side to side and front to back level of the top.
3. If leveling is necessary, loosen the four mounting (3/8-16) screws and turn the appropriate leveling set (1/4-20) screw.
4. When the top is level, re-tighten each mounting screw.

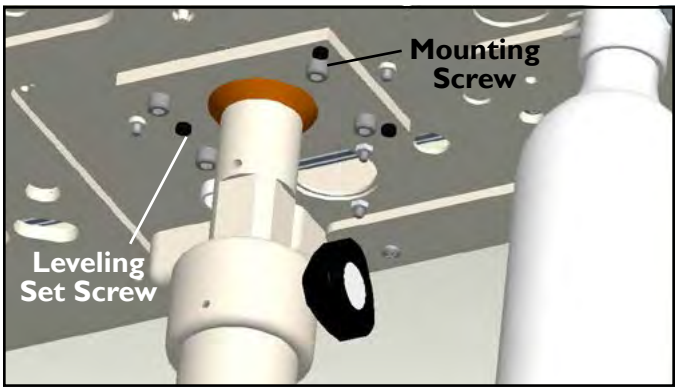


## Cart Lid

1. To open the cart lid, unscrew the lid screw located under the cart's chassis.
2. The lid is now free to open and close.
3. When the lid is closed, screw in the lid screw.

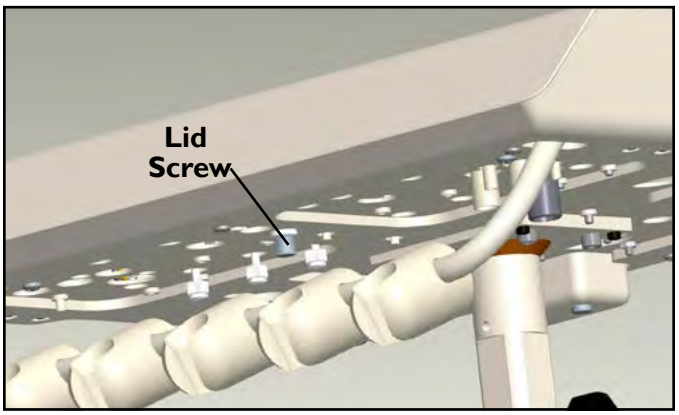


## Assistant's Accessories

### Saliva Ejector (SE)

1. Connect the SE valve to the 5/16" O.D. tubing.

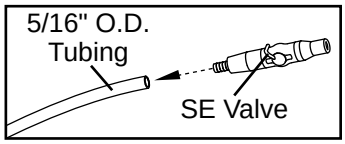


2. Hang the SE valve in the instrument holder.
3. Connect the tubing to the **open** 1/4" port under the solids collector in the assistant's arm.

### High-Volume Evacuator (HVE)

1. Connect the HVE valve to the 5/8" O.D. tubing.

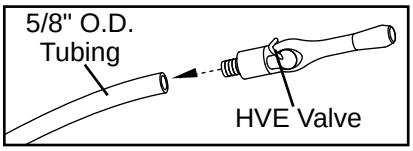


2. Hang the HVE valve in the instrument holder.
3. Connect the tubing to an **open** 1/2" port under the solids collector located under the cart.

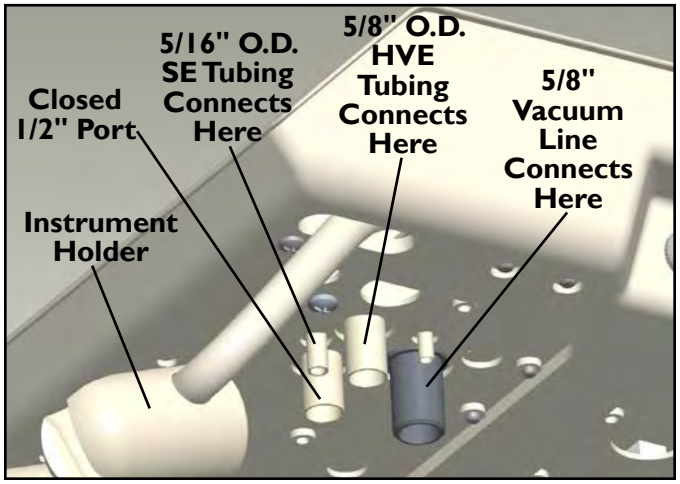


4. If an optional second HVE valve is used, do the following:
   a. Insert a sharp, pointy object into the **closed** 1/2" port under the solids collector and create a smooth opening.
   b. Repeat Steps **1** through **3**.

### Air / Water Syringe (Optional)

**NOTE:** *Connections for the optional air / water syringe are factory installed.*

## Fiber Optics - Electrical (Optional)

**NOTE:** *If the optional fiber optics were included in the original order, electrical connections have been made inside the delivery head at the factory. Plug the fiber optic transformer into the outlet and the harness from the cart umbilical.*

## Syringe Tubing

1. Hang the syringe in the holder.
2. Connect the air and water lines to the appropriate male and female connectors in the delivery head chassis.

### Explanation of Control Symbols:

 = ON (Power)

= Standby (Power)

= Water

= No Water

= Flush

= Chip Air

= Water Bottle

= City Water

= Handpiece Drive (Air)

= Coolant Air

= Coolant Water

= Variability

# Delivery System

## Utility Service Compartment

1. Turn on all services supplying the USC.
2. Open the air and water manual stop valves by turning the knobs counterclockwise.
3. Inspect all joints and connections for leaks.
4. Plug the power cord from the fiber optics into an electrical outlet.
5. Turn the master switch **ON**.
6. Inspect for leaks in the service console and delivery head.

## Air and Water Filter/Regulators

If the regulators are not set at 551.6 pKa (80 PSI) for air and 275.8 pKa (40 PSI) for water, do the following adjustment process:

**NOTICE**

The air regulator is factory preset to deliver 551.6 pKa (80 PSI). The water regulator is preset to deliver 275.8 pKa (40 PSI).

1. Pull the locking knob and turn the adjustment knob on each regulator until the correct pressure reading is reached.
2. When finished, push the locking knob down.

# Foot Control & Handpiece

## Chipblower

If the handpiece utilizes coolant air, a burst of air should be delivered to the handpiece when the chip air valve on the foot control is depressed.

**⚠ CAUTION**

Before utilizing handpieces, all air must be purged from the coolant water lines to allow the system to function properly.

## Coolant Water Lines

1. At the foot control, flip the toggle valve to **WET**.

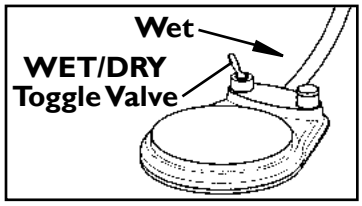


2. Purge air from the coolant water lines for each handpiece as follows:
   a. Make sure master switch is in **ON** position.
   b. Open the water coolant valve to the full, open position.

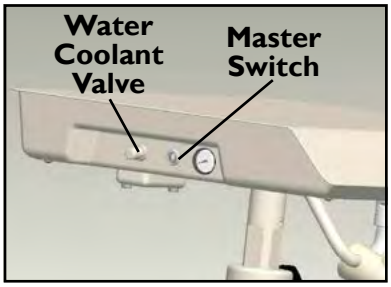


   c. Pick up a handpiece tubing and lay the end into a sink or cuspidor bowl.
   d. Simultaneously depress the foot control disc and hold the flush valve, located in the back of the delivery head, in the flush position. Let water flow until all air has escaped.
   e. Return the handpiece tubing to its holder.
   f. Repeat steps **c**. through **e**. for each additional handpiece tubing.

3. Attach the handpiece to the tubing as follows:
   a. Slide the connector nut down along the tubing to expose the handpiece adaptor.
   b. Carefully align and insert the handpiece base into the adaptor. Then replace and tighten the connector nut.

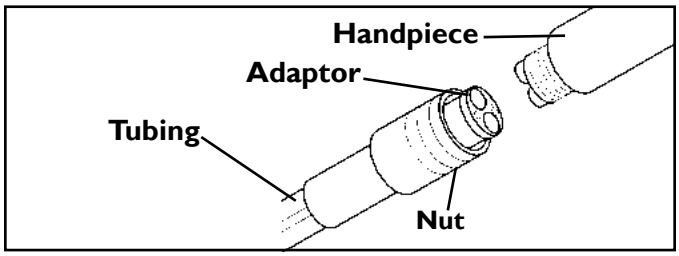


## Air Pressure

1. Flip the toggle valve to **DRY** at the foot control.
2. To adjust the individual handpiece drive air pressure to the manufacturer's specifications do the following procedure:
   a. Remove the handpiece from its holder.
   b. Hold the handpiece, fully depress the foot control and observe the amount of air pressure delivered to the handpiece indicated on the drive air pressure gauge located on the side of the cart.
   c. Locate the air pressure adjustment screws on the bottom of the delivery head chassis.

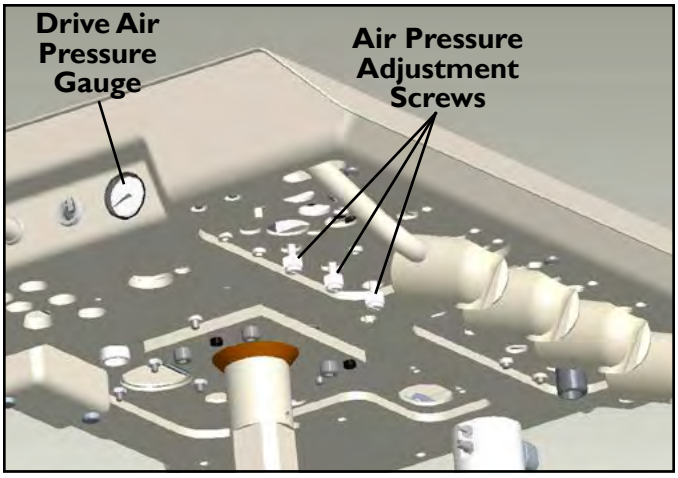


   d. Turn the air pressure adjustment screw on the control valve of the appropriate handpiece *(counterclockwise to increase pressure, clockwise to decrease pressure)* until the handpiece manufacturer's correct specification registers on the pressure gauge.
3. Repeat **a**. through **d**. in Step 2 to set the pressure for each handpiece.

**NOTE:** *If a low-speed handpiece is required, slide the pinch clamp over the appropriate water line going through the pinch valve.*

## Syringe

If the unit is equipped with a syringe, first depress the air button and then the water button to test the flow.

## Fiber Optics (Optional)

Follow the test procedures outlined in the instructions included in each fiber optic handpiece package.

**⚠ WARNING**

To prevent possible injury because of accidental operation, do not leave young children unattended.

## Delivery System

Some of the Simplicity Cart Delivery Unit design features:

- Operation of three handpieces and a syringe.
- Drive air may be adjusted individually for each handpiece.
- An automatic cut-off valve in each handpiece holder section disables operation for that position.
- Foot control toggle valve allows wet or dry cutting.
- Master switch turns entire unit **ON** and **OFF**.

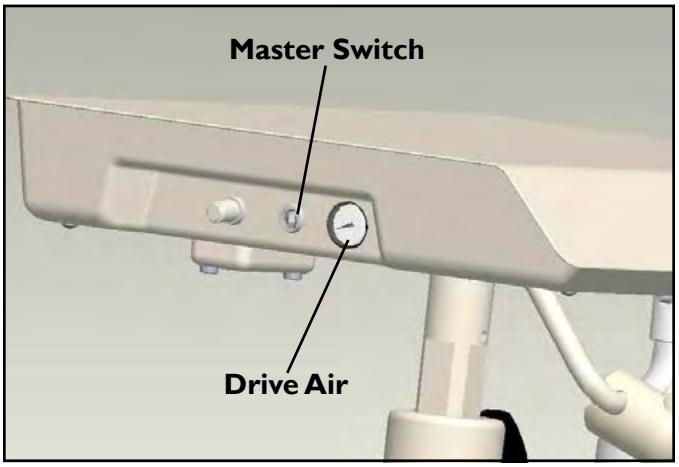


## Master Switch

The master switch controls the **ON/OFF** function of air, water and electricity to the entire unit. Flip the master switch to turn **ON** the unit.

**⚠ CAUTION**

**VERY IMPORTANT:** At the end of each work day and anytime the unit is unattended, make sure the master switch is in the **OFF** position.

## Instrument Hanger

- An automatic **CUT OFF**, can be demonstrated by placing tubing in the hanger and disabling operation for that position.

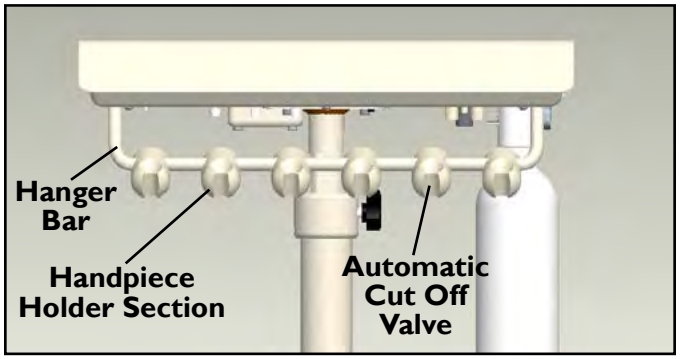


- Each handpiece holder angle can be adjusted by using an Allen wrench to loosen two set screws in the back of each section and rotating it to the desired angle; then re-tightening the screws.
- An oil collector/filter is designed to collect oil from the handpiece exhaust air. Once a week, check the filter for cleaning or replacement by removing the two screws that secure the filter cover.

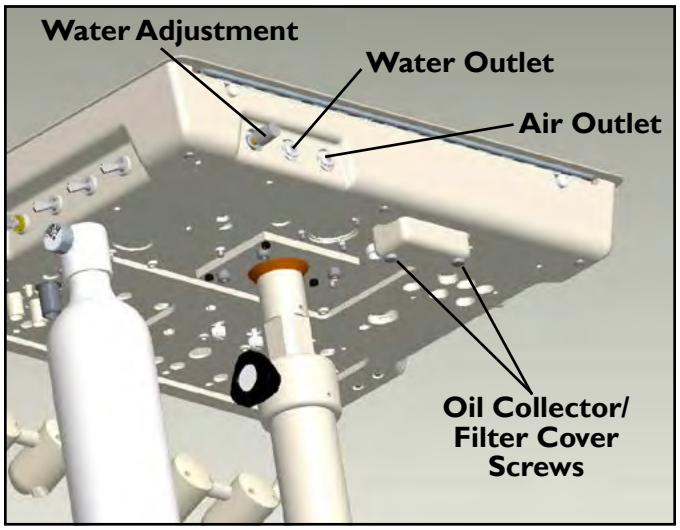

# Handpiece

## Coolant Water Adjustment

- Coolant water spray to all the handpieces can be turned **ON** or **OFF** using the toggle switch located on the foot control.
- The coolant spray volume is regulated for each handpiece by using the coolant water adjustment valve located on the side of the delivery head.

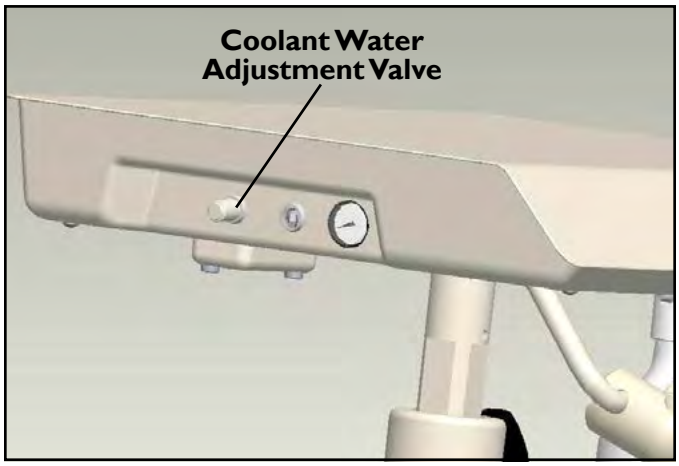


- While operating a handpiece, turn the coolant water adjustment valve counterclockwise *(while looking directly into valve)* to increase the volume of coolant water spray. To decrease volume, turn the valve clockwise.

## Air Pressure

Air pressure to each handpiece can be adjusted to the manufacturer's specifications by following the air pressure instructions in Section IV Testing under the heading Air Pressure on Page 11.

**NOTE:** *These procedures must be done while:*

- *The master switch is in the* **ON** *position,*
- *The handpiece is out of its holder and*
- *The foot control is fully depressed.*

**NOTE:** *When making necessary air pressure adjustments, refer to the air pressure gauge located at the side of the cart to check the approximate amount of air pressure delivered to the handpiece.*

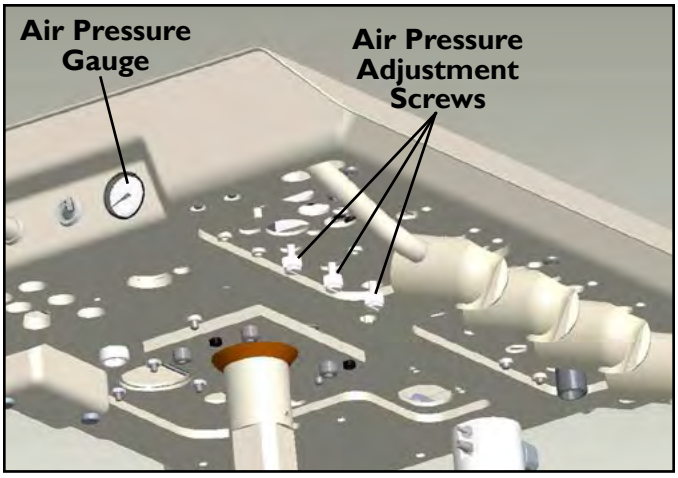


## Flush System

It is recommended that the tubing of each handpiece used be flushed after each patient.

1. Hold the handpiece tubing over a sink, cuspidor or open vacuum line.
2. Move the **FLUSH** valve located on the side of the delivery head to the right and hold it there for 20 seconds.

**NOTE:** *Flushing the water line in the handpiece can be done by operating the* **FLUSH** *valve while either fully depressing or not depressing the foot control.*

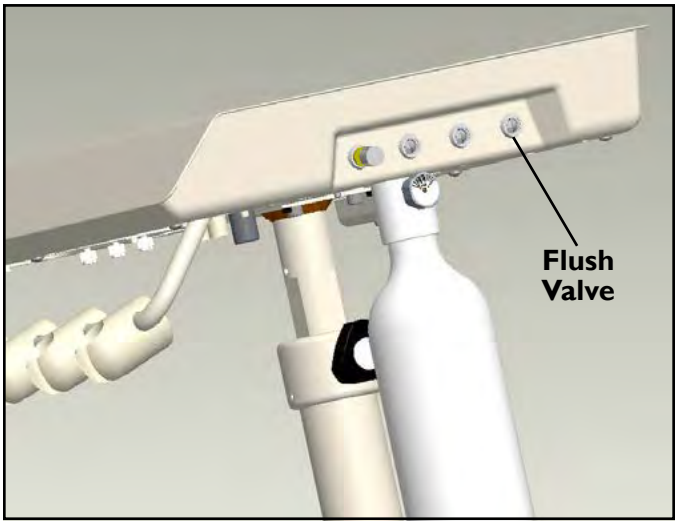

## Syringe

The syringe is designed to deliver air or water, or a mixture of air and water, as required.

- To deliver water only, press the button on the syringe marked with a water drop symbol.
- For air only, press the button on the syringe with no marking.
- To get a spray mixture of air and water, press both buttons simultaneously.

## Foot Control / Chipblower

*The speed of the handpiece is controlled by depressing the disc located on the foot control.*

- A light pressure on the foot control disc causes a slow speed.

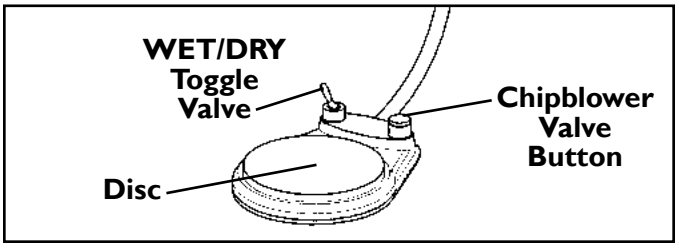


- Full pressure on the disc causes the handpiece to operate at full speed.

**NOTE:** *The coolant water spray* **ON/OFF** *function is also controlled by using the toggle valve on the foot control as described above.*

If the handpiece utilizes coolant air, the chipblower feature is used to blow debris away from the cutting site by creating an air blast through the handpiece without causing the burr to rotate. To operate the chipblower, depress and hold down the valve button on the upper right of the foot control.

## Fiber Optics (Optional)

The fiber optics control is automatically activated by operating the handpiece using the foot control.

**NOTE:** *When the foot control is released, the fiber optics light will stay on for approximately ten seconds to allow inspection of the cutting site.*

## Clean Water System

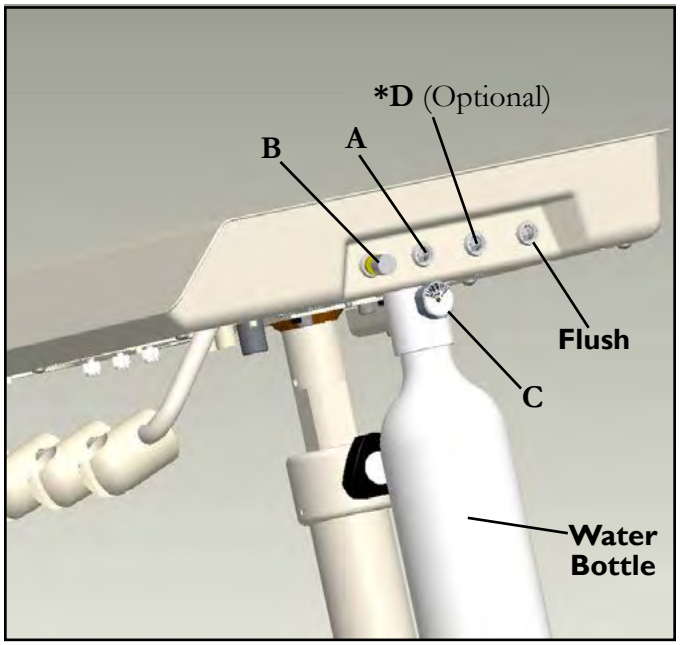


- To operate the clean water system, the master switch must be **ON**.
- Flip the bottle toggle switch **(A)** to the **ON** position.
- Adjust the regulator valve **(B)** to 275.8 pKa (40 PSI). This will be shown on gauge **(C)**.
- If optional city water is in use, flip the supply toggle switch **(*D)** to change from city to bottled water.
- To remove the bottle, flip switch **(A)** to the **OFF** position, then unscrew it from the assembly.

## Cleaning

The Simplicity Cart Delivery Unit should be cleaned as follows:

- Wipe frequently with a damp, lint-free cloth.
- Use a mild detergent to clean stains.

**⚠ CAUTION**

Do not use abrasive cleaning agents.

- At the end of the day, flip the master switch to the **OFF** position and clean the instrumentation.
- Each morning, flip the master switch to the **ON** position and check the air and water system for proper operation using the three-way syringe.

**NOTICE**

SlugBuster™ solution and cleaning brushes for assistant's instrumentation can be ordered through DentalEZ dealers.

**⚠ CAUTION**

Clean outside surfaces of tubing with a non-alcohol based cleaner/disinfectant only. Use of an alcohol based cleaner/disinfectant will discolor tubing.

## Disinfecting

Liquid disinfectants are recommended for use on all external surfaces and should be applied using a soft, clean cloth.

**⚠ CAUTION**

Avoid using disinfectants in spray containers because they may cause premature staining, discoloration and/or damage to the Simplicity Cart Delivery Unit.

Use extreme caution when selecting the proper chemical disinfectant for the delivery unit.

**⚠ CAUTION**

Do not use disinfectants that contain any of the following:

- Iodophors
- Phenols
- Alcohol on plastic surfaces
- Glutaraldehydes
- Sodium Hypochlorites

**NOTE:** **Cavicide™ is the recommended disinfectant for use on all external surfaces.*

*Cavicide™ is a trademark of Micro Aseptic Products, Inc.

A full-color tubing diagram of the Simplicity Cart Delivery Unit system is located at the end of this manual.

The following charts should be used when trouble-shooting operational problems. If these suggested troubleshooting procedures do not resolve the problem, see the Service Instruction on Page 18.

**WARNING**

Exercise extreme caution when troubleshooting the electrical components of the deliver unit. When testing, **always disconnect** the external power. When electrical power is required, safety precautions **must** be followed.

| Delivery Head | | |
|---|---|---|
| **Symptom** | **Possible Cause(s)** | **Solution** |
| Unit will not turn on. | No air to master switch | Open stop valve in floor utility box. |
| | | Open and adjust air regulator to 80 PSI. |
| | | Check for pinched red 1/8" tubing in umbilical. |
| | Faulty master switch | Turn switch to **ON** position and verify air flow. |
| | Faulty air pilot valve | Verify an air supply to top fitting of valve. |
| | | If air is present at top fitting of valve, verify air to foot control tubing. If no air at tubing, valve is defective. |
| Unit has no electric power | No building power | Check main circuit supply or contact electrician. |
| | Improper outlet voltage | Verify proper outlet voltage in USC. |
| Unit has no air | Unit is not turned on. | Ensure master switch is in **ON** position. |
| | Air stop valve is closed. | Turn stop valve **ON** and verify 80 PSI is on air gauge. |
| | Pinched air line | Check for pinched or restricted 1/4" red tubing from floor utility box to **cart**. |
| | Faulty air pilot valve | Check barbs for blockage. If none, replace valve. |
| No water (handpiece & syringe) | Master switch is in **OFF** position. | Turn switch to **ON** position. |
| | Pressure regulator is not adjusted. | Ensure clean water system gauge reads 40 PSI. |
| | Slide clamp is clamping line. | Move clamp to allow water flow through line. |
| Air in coolant water | Unit has not been purged. | Purge water lines. |
| | Faulty water control valve | If unit was purged, replace water control valve. |
| Water flush fails to operate. | Water toggle is in **OFF** position. | Place toggle in **ON** position. |
| | Faulty water flush toggle valve | If water is present at valve, but not flowing, replace valve. |

| Handpiece | | |
|---|---|---|
| **Symptom** | **Possible Cause(s)** | **Solution** |
| Water dribbles from handpiece while in holder. | Faulty handpiece holder | Repair or replace holder. |
| | Pinched or restricted tubing to holder | Straighten or replace tubing. |
| | Pinch valve diaphragm is leaking | Replace diaphragm. |
| | Low air pressure | Ensure air regulator gauge in floor box reads 80 PSI. |
| Water dribbles from handpiece after foot control is released. | Faulty water control valve | Depress foot control, then release Remove black tubing from water control valve. If dribble continues, replace valve. |
| | Faulty water relay in foot control | Turn unit **OFF**. Open foot control and inspect water relay block. If piston is not damaged and is moving freely, stretch the spring. Reassemble and retry foot control. |
| | Pinched or restricted tubing from foot control | Straighten or replace tubing. |
| | Low air pressure | Ensure air regulator gauge in floor box reads 80 PSI. |
| No fiber optic light at handpiece | Power transformer is not plugged in. | Plug transformer into designated receptacle in USC. |
| | Internal wires in control head and/or USC are not connected | Check connections in control head and/or USC. |
| | No signal air to fiber optic lamp control | Check for pinched or restricted tubing. |
| | Faulty transformer | Check output for 9V. |
| | Faulty bulb | Replace bulb. |
| No coolant water at any handpiece | Coolant water adjustment valves are closed. | Turn valve counterclockwise to open valve. |
| | Water toggle on foot control is in the **OFF** position. | Flip toggle to the right for the **ON** position. |
| | Slide clamp is clamping line. | Move clamp to allow water flow through line. |
| | Pinched or restricted tubing | Straighten or replace tubing. |
| No coolant air to handpiece | Slide clamp is clamping line. | Move clamp to allow air flow through line. |
| | Pinched or restricted tubing | Straighten or replace tubing. |

| Handpiece (continued) | | |
|---|---|---|
| **Symptom** | **Possible Cause(s)** | **Solution** |
| No drive air | Drive air flow adjustments on pinch valves are closed. | Using a screw driver, turn adjustment screw counter-clockwise to adjust drive air pressure. Set to manufacturer's recommended pressure. |
| | Faulty handpiece holder valve | If pinch valve does not release with handpiece out of holder and tubing to holder is not restricted, replace hanger valve. |
| | Faulty foot control | Depress foot control. If no air is present, repair or replace foot control |
| | Pinched or restricted tubing | Straighten or replace tubing. |

## Service Instruction

**WARNING**

Before servicing, always disconnect the external power by unplugging the unit from the power receptacle.

If the problem is not addressed or cannot be isolated by performing the suggested troubleshooting procedures, contact your local DentalEZ full-service dealership. *(See Limited Warranty, Page 24.)* Be prepared to supply the following product information:

- Model Name_____
- Model Number_____
- Serial Number_____
  *(The serial number label is located on the underside of the cart.)*
- Date of Installation_____

**NOTICE**

The DentalEZ Technical Service Department is available to supply service personnel with any additional information or instructions needed to repair or maintain the dental delivery system.

## Disposal of Equipment

### Disposal and Decommissioning of DentalEZ products:

**Note: All local regulatory requirements for disposal and decommissioning of equipment apply.**

**Electrical Salvage: Remove fiber optic controller and transformer.**

**Metal Salvage: Remove all aluminum and steel components for recycle as metal salvage.**

**Plastic Salvage: Remove all plastic components for recycle as plastic salvage.**

**Biologically Contaminated Salvage: Oral extraction lines should be handled with precaution and disposed of appropriately.**

**Non-Salvage Components: All other material unsuitable for recycling should be disposed of properly.**

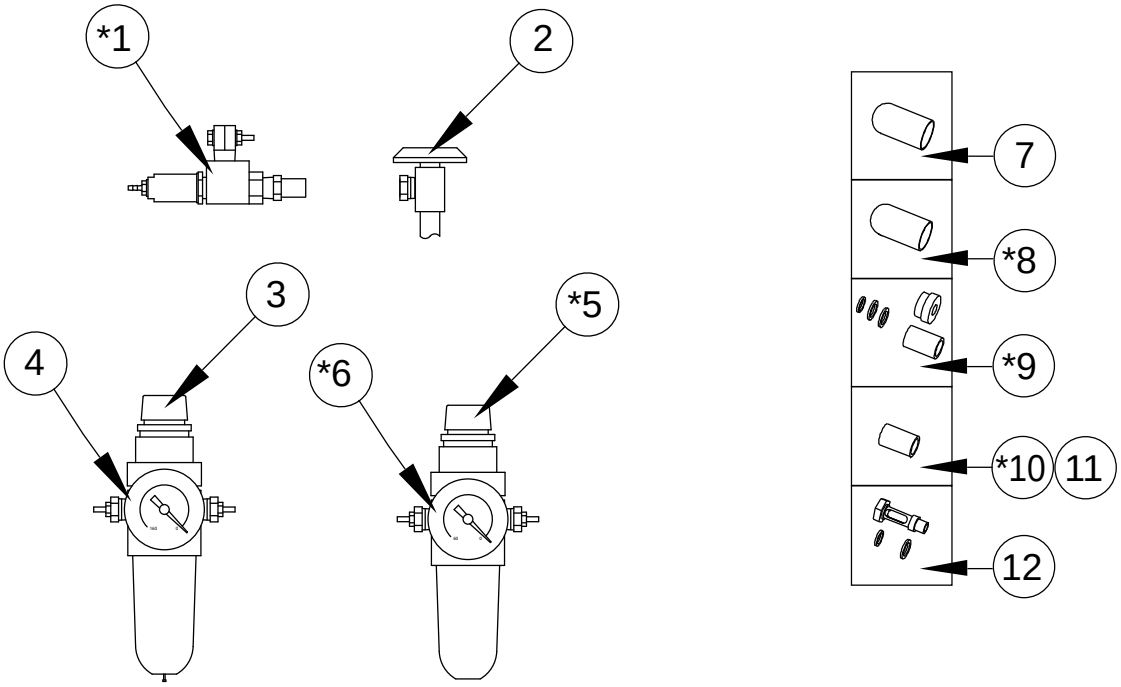


| Utility Service Center | | |
|---|---|---|
| # | Part/Kit Name | Part/Kit No. |
| *1 | Water Actuator Valve | 3801-637 |
| 2 | Stop Valve | 3800-960 |
| 3 | Air Regulator | 3801-638 |
| 4 | Air Pressure Gauge | 3800-534 |
| *5 | Water Regulator | 3802-107 |
| *6 | Water Pressure Gauge | 3800-533 |
| 7 | Air Regulator Bowl - Watts | 3802-267 |
| *8 | Water Regulator Bowl - Watts | 3802-268 |
| *9 | Water & Air Regulator Repair Kit - Watts | 3802-273 |
| *10 | Water Regulator Filter - Watts | 3802-270 |
| 11 | Air Regulator Filter - Watts | 3802-271 |
| 12 | Regulator Retainer - Watts | 3802-272 |
| * | Water Regulator Gauge Repl. Kit - Watts | 3802-269 |
| | Air Regulator Gauge Repl. Kit - Watts | 3802-266 |

*Optional Equipment

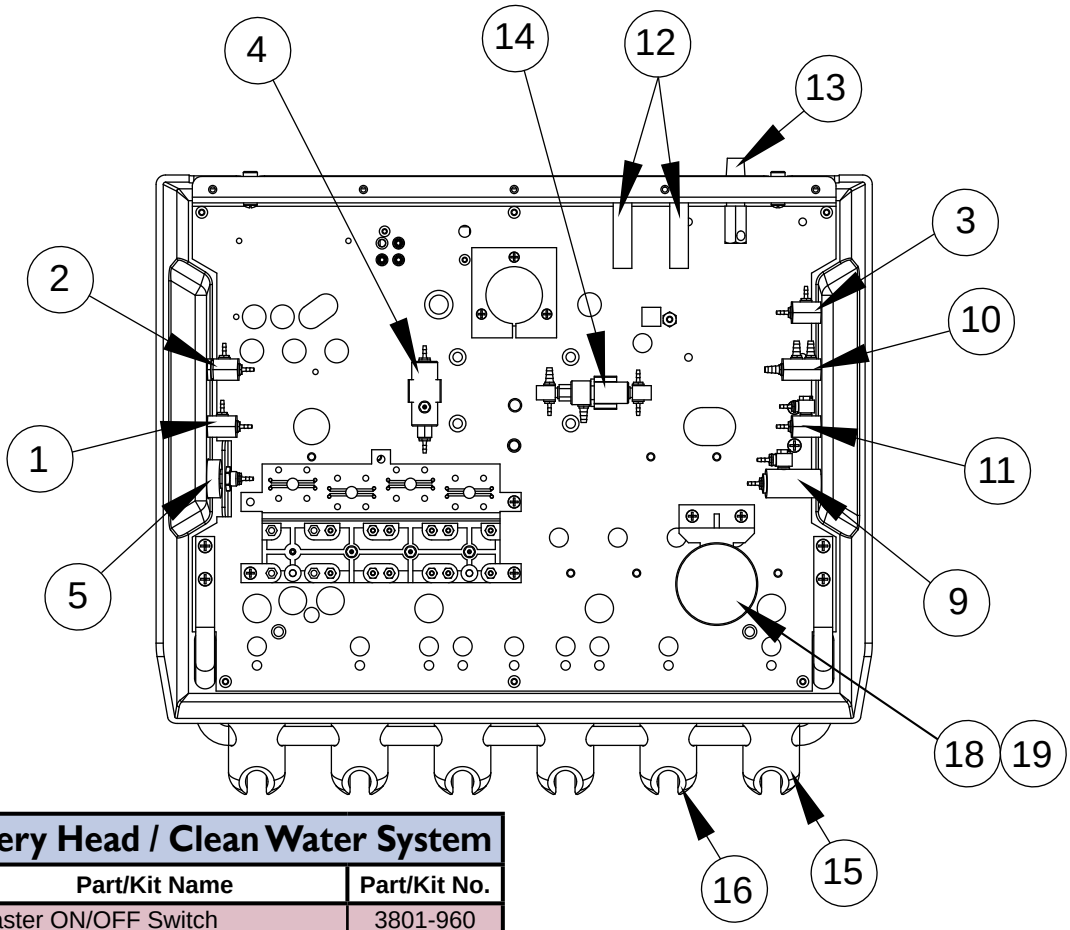


| Delivery Head / Clean Water System | | |
|---|---|---|
| # | Part/Kit Name | Part/Kit No. |
| 1 | Master ON/OFF Switch | 3801-960 |
| 2 | Water Adjustment Valve | 3801-922 |
| 3 | Flush Toggle | 3801-976 |
| 4 | Water Control Valve | 3800-417 |
| 5 | Gauge Assembly | 3802-083 |
| 6 | Oil Collector Cover & Filter | 3802-211 |
| 7 | Water Bottle Manifold | 3801-718 |
| 8 | Water Bottle, 1.5L | 3802-182 |
| 9 | Pressure Regulator | 3801-867 |
| *10 | City/Bottle Routing | 3802-090 |
| 11 | Bottle ON/OFF Switch | 3802-091 |
| 12 | Water Outlet | 3801-854 |
| 13 | Water Adjustment Valve | 3801-208 |
| 14 | Poppet Valve Assembly | 3802-192 |
| 15 | Handpiece Holder, Universal | 3801-697 |
| 16 | Handpiece Holder, Automatic | 3801-696 |
| 17 | Water Bottle Gasket | 3802-342 |
| 18 | Solids Collector Traps | 3625-338 |
| 19 | Solids Seperator Assembly | 3801-594 |
| | Water Bottle Replacement Kit, 1L | 3802-363 |

*Optional Equipment

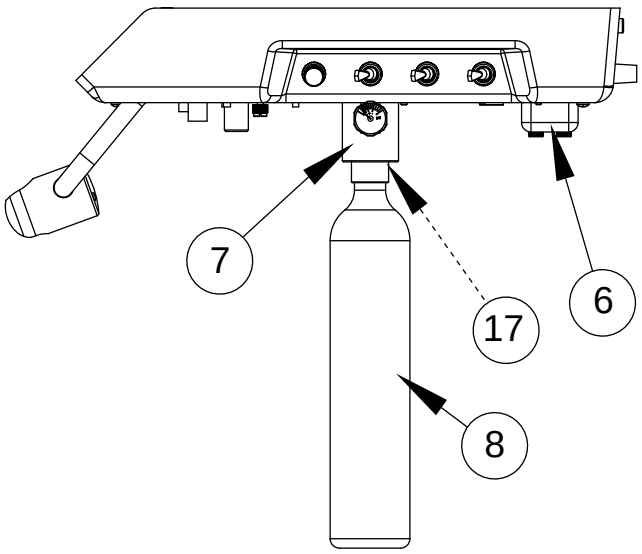

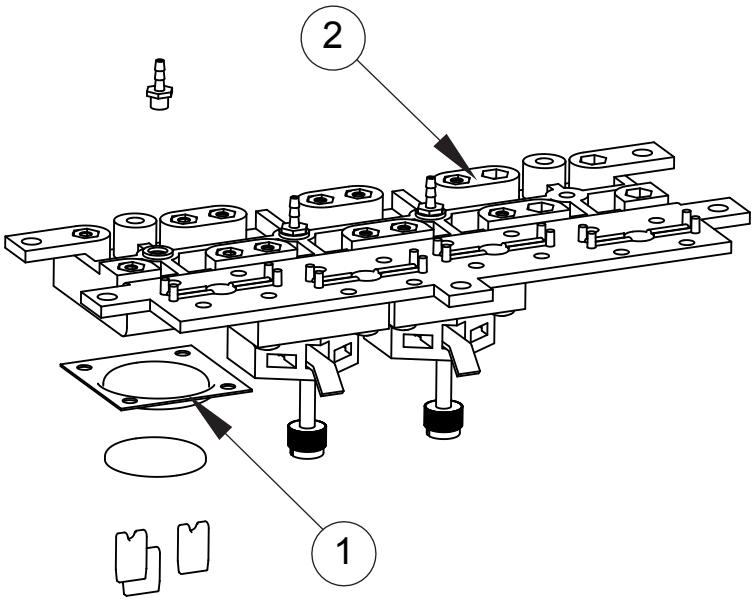


| Manifold | | |
|---|---|---|
| # | Part/Kit Name | Part/Kit No. |
| 1 | Diaphragm Repair Kit | 3800-749 |
| 2 | Manifold Assembly, 3 HP (no lock-out) | 3802-219 |
| 3 | Tubing Slide Clamp | 2533-074 |

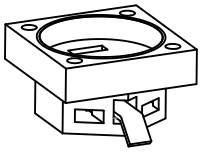

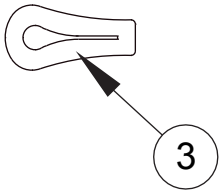


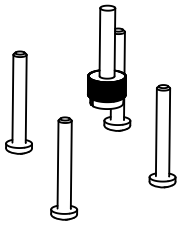

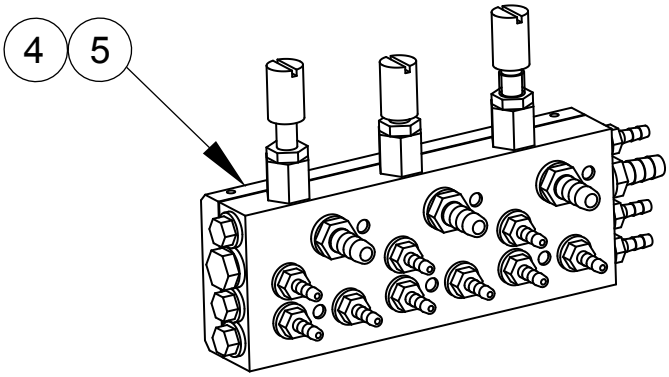


| Control Block | | |
|---|---|---|
| # | Part/Kit Name | Part/Kit No. |
| 4 | Replacement Block, 3 HP | 3802-320 |
| 5 | Replacement Block, 4 HP | 3802-321 |
| | Control Block Repair Kit, 3 HP or 4 HP | 3802-324 |

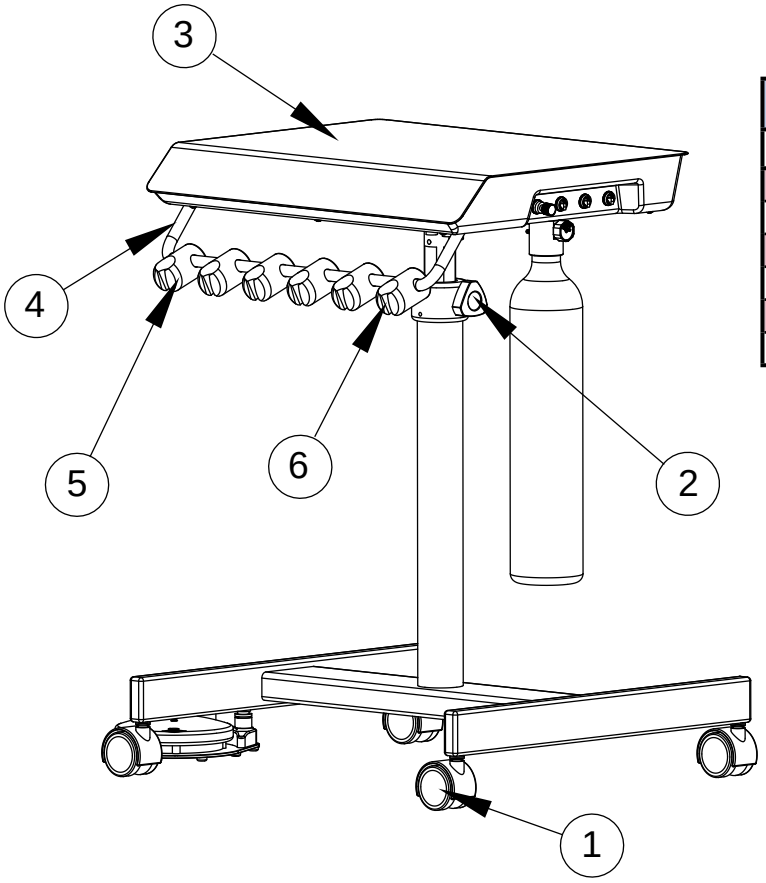


| Cart Replacement Parts | | |
|---|---|---|
| # | Part/Kit Name | Part/Kit No. |
| 1 | Cart Wheels (4) | 3802-160 |
| 2 | Cart Knob | 3800-111 |
| 3 | Cart Lid | 3802-260 |
| 4 | Hanger Bar | 3802-261 |
| 5 | Handpiece Holder, Universal | 3801-697 |
| 6 | Handpiece Holder, Automatic | 3801-696 |

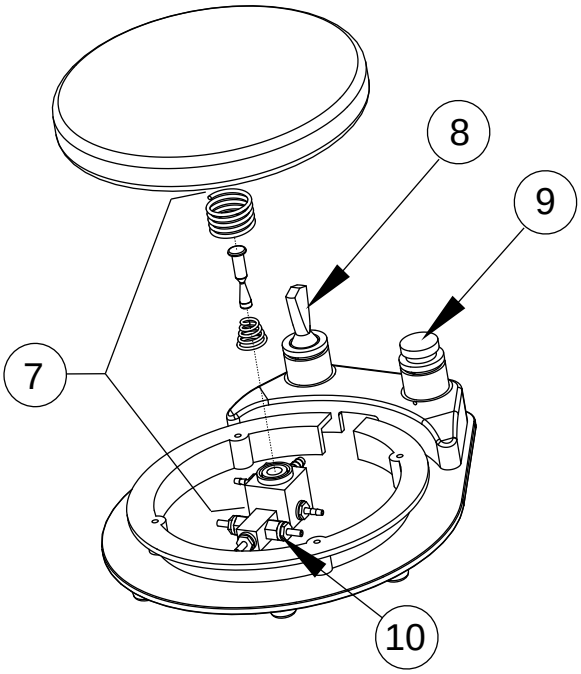


| Foot Control | | |
|---|---|---|
| # | Part/Kit Name | Part/Kit No. |
| 7 | Drive Air Repair Kit | 3802-417 |
| 8 | Wet/Dry Toggle Valve | 3802-418 |
| 9 | Chip Air Valve | 3802-419 |
| 10 | Shuttle Valve Kit | 3801-585 |
| | Foot Control, Complete | 3801-706 |

| Air / Water Syringe | | |
|---|---|---|
| # | Part/Kit Name | Part/Kit No. |
| 1 | Cartridges | 3802-335 |
| 2 | Syringe Tip Kit | 3802-205 |
| 3 | O-Rings (Complete Set) | 3658-420 |

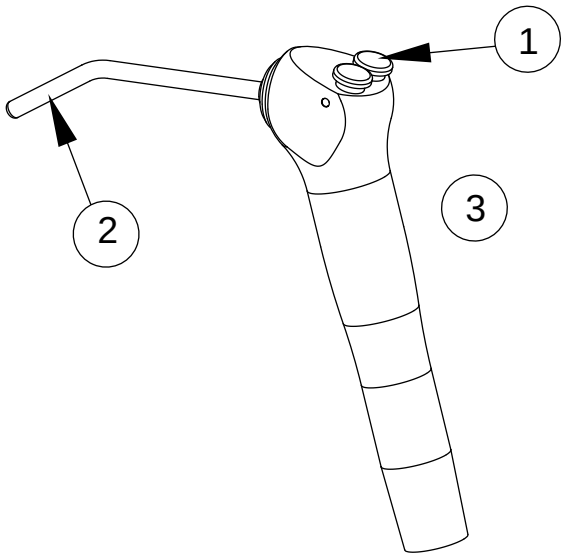


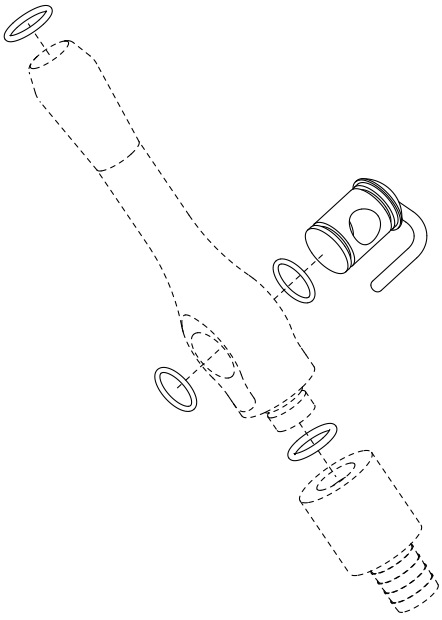

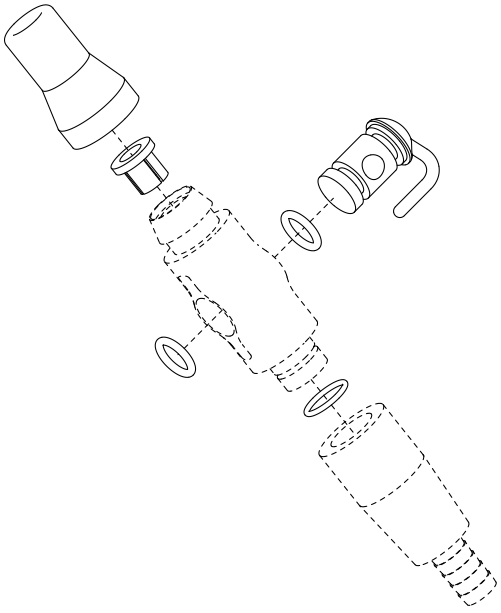

| HVE Nozzle | | |
|---|---|---|
| # | Part/Kit Name | Part/Kit No. |
| | HVE Repair Kit | 3802-154 |
| | Full Replacement Parts Kit | 3801-927 |

| SE Nozzle | | |
|---|---|---|
| # | Part/Kit Name | Part/Kit No. |
| | SE Repair Kit | 3802-153 |
| | Full Replacement Parts Kit | 3801-926 |

# DentalEZ® Group
# DentalEZ Equipment Division
# Simplicity® Cart Delivery Unit

The DentalEZ Group and its employees are proud of the products we provide to the dental community. We stand behind these products with a warranty against defects in material and workmanship as provided below.

In the event that you experience difficulty with the application or operation of any of our products, please contact our Technical Service Department at our expense at 1-866-DTE-INFO (1-866-383-4636).

If we cannot resolve the issue by telephone, we will arrange for a representative to contact you or suggest that the product be repaired by a dealer service technician.

If product repair or return is required, we will provide you with a **Return Authorization** number and shipping instructions to return the product to the proper facility. If the product is under warranty, we will ask you to provide proof of purchase, such as a copy of your invoice. Please be sure to include the **Return Authorization** number on the package you are returning. **Products returned without a Return Authorization number cannot be repaired**.

Freight costs for product returns are the responsibility of the customer. Products under warranty will be repaired or replaced at our sole discretion and returned at our expense. Products outside the warranty limits will be repaired and returned with costs invoiced to the customer. We are not responsible for shipping damages. We will, however, help you file a claim with the freight carrier. Written repair estimates are available.

DentalEZ warrants the Simplicity Cart Delivery Unit to be free of defects in material and workmanship, under normal usage for a period of three (3) years from the date of installation*, with the exception of the following items which are covered under this warranty for a period of one (1) year from the date of installation:*

- Tubings and Fittings
- Wiring
- Syringe
- Handpiece Tubings

Please note the following additional terms of our warranty and return policy:

- Warranties cover manufacturing defects only and do not cover defects resulting from abuse, improper handling, cleaning, care or maintenance, normal wear and tear or non-observance of operating, maintenance or installation instructions. **Failure to use authorized parts or an authorized repair facility voids this warranty.**
- **Liability is limited to repair or replacement of the defective product at our sole discretion. All other liabilities, in particular liability for damages, including, without limitation, consequential or incidental damages are excluded.**
- THIS WARRANTY IS IN LIEU OF ALL OTHER WARRANTIES, EXPRESSED OR IMPLIED, INCLUDING ANY IMPLIED WARRANTIES OF MERCHANTABILITY OR FITNESS FOR A PARTICULAR PURPOSE. NO EMPLOYEE, REPRESENTATIVE OR DEALER IS AUTHORIZED TO CHANGE THIS WARRANTY IN ANY WAY OR TO GRANT ANY OTHER WARRANTY.

WARRANTY REPAIRS: Parts repaired or replaced on a product that is in warranty will be warranted for the duration of that product's original warranty.

NON-WARRANTY REPAIRS: The warranty on parts either repaired or replaced on an out-of-warranty product will cover the repaired part only and will be for the time frame of a new part's warranty period.

PRODUCT RETURN: Opened products or product returns more than a year old cannot be returned for credit. There will be a 15% ($25.00 minimum) restocking charge on all items authorized for return.

** Provided conditions defined in the Installation, Operation and Care Manual are met.*

DentalEZ and Simplicity are registered trademarks of DentalEZ, Inc. SlugBuster is a trademark of RAMVAC Dental Products, Inc.

© 2014 DentalEZ Alabama, Inc.

**WARNING**

- Use only replacement cables listed in Parts Section. Other cables and accessories may negatively affect EMC performance.
- When the Simplicity Cart is used adjacent to other equipment, observe the unit to verify normal operation.

Table 1

| Guidance and manufacturer's declaration - electromagnetic emissions | | |
|---|---|---|
| The Simplicity Cart is intended for use in the electromagnetic environment specified below. The customer or the user of the Simplicity Cart should assure that it is used in such an environment. | | |
| Emissions test | Compliance | Electromagnetic environment – guidance |
| RF emissions<br><br>CISPR 11 | Group 1 | The Simplicity Cart uses RF energy only for its internal function. Therefore, its RF emissions are very low and are not likely to cause any interference in nearby electronic equipment. |
| RF Emissions<br><br>CISPR 11 | Class A | The Simplicity Cart is suitable for use in all establishments, other than domestic establishments and those directly connected to the public low-voltage power supply network that supplies buildings used for domestic purposes. |
| Harmonic emissions<br><br>IEC 61000-3-2 | Class A, | Not Applicable |
| Voltage fluctuations/flicker emissions<br><br>IEC 61000-3-3 | Class A | Not Applicable |

Table 2

| Guidance and manufacturer's declaration – electromagnetic immunity | | | |
|---|---|---|---|
| The Simplicity Cart is intended for use in the electromagnet environment specified below. The customer or the end user of the Simpl. Cart should assure that it is used in such an environment. | | | |
| Immunity test | IEC 60601 Test level | Compliance level | Electromagnetic environment - guidance |
| Electromagnetic discharge (ESD)<br><br>IEC 61000-4-2 | ±6 kV contact<br><br>±8 kV air | ±6 kV contact<br><br>±8 kV air | Floors should be wood, concrete or ceramic tile. If floors are covered with synthetic material, the relative humidity should be at least 30 %. |
| Electrical fast transient/burst<br><br>IEC 61000-4-4 | ±2 kV for power supply lines<br><br>±1 kV for input/output lines | ±2 kV for power supply lines<br><br>±1 kV for input/output lines | Mains power quality should be that of a typical commercial or hospital environment. |
| Surge<br><br>IEC 61000-4-5 | ±1 kV differential mode<br><br>±2 kV common mode | ±1 kV differential mode<br><br>±2 kV common mode | Mains power quality should be that of a typical commercial or hospital environment. |
| Voltage dips, short interruptions and voltage variations on power supply input lines<br><br>IEC 61000-4-11 | <5 % $U_T$<br>(>95 % dip in $U_T$)<br>for 0.5 cycle<br><br>40 % $U_T$<br>(60 % dip in $U_T$)<br>for 5 cycles<br><br>70 % $U_T$<br>(30 % dip in $U_T$)<br>for 25 cycles<br><br><5 % $U_T$<br>(>95 % dip in $U_T$)<br>for 5 sec | <5 % $U_T$<br>(>95 % dip in $U_T$)<br>for 0.5 cycle<br><br>40 % $U_T$<br>(60 % dip in $U_T$)<br>for 5 cycles<br><br>70 % $U_T$<br>(30 % dip in $U_T$)<br>for 25 cycles<br><br><5 % $U_T$<br>(>95 % dip in $U_T$)<br>for 5 sec | Mains power quality should be that of a typical commercial or hospital environment. If the user of the Simplicity Cart requires continued operation during power mains interruptions, it is recommended that the Unit be powered from an uninterruptible power supply or a battery. |
| Power frequency (50/60 Hz) magnetic field IEC 61000-4-8 | 3 A/m | 3 A/m | Power frequency magnetic fields should be at levels characteristic of a typical location in a typical commercial or hospital environment. |

**Table 4**

| Recommended separation distance between<br>Portable and mobile RF communications equipment and the model @ 3Vrms | | | |
|---|---|---|---|
| The Simplicity Cart is intended for use in an electromagnetic environment in which radiated RF disturbances are controlled. The customer or the user of the Simplicity Cart can help prevent electromagnetic interference by maintaining a minimum distance between portable and mobile RF communications equipment (transmitters) and the Simplicity Cart as recommended below, according to the maximum output power of the communications equipment. | | | |
| Rated maximum output power of transmitter W | Separation distance according to frequency of transmitter m | | |
| | 150 kHz to 80 MHz $d = \left[\frac{3.5}{v_1}\right]\sqrt{P}$ | 80 MHz to 800 MHz $d = \left[\frac{3.5}{E_1}\right]\sqrt{P}$ | 800 MHz to 2.5 GHz $d = \left[\frac{7}{E_1}\right]\sqrt{P}$ |
| 0.01 | 0.12 | 0.12 | 0.23 |
| 0.1 | 0.34 | 0.34 | 0.74 |
| 1 | 1.7 | 1.7 | 2.3 |
| 10 | 3.7 | 3.7 | 7.4 |
| 100 | 11.7 | 11.7 | 23.3 |
| | | | |
| For transmitters rated at a maximum output power not listed above, the recommended separation distance d in meters (m) can be estimated using the equation applicable to the frequency of the transmitter, where P is the maximum output rating of the transmitter in watts (W) according to the transmitter manufacturer.<br><br>Note 1: At 80 MHz and 800 MHz, the separation distance for the higher frequency range applies. | | | |
| | | | |
| Note 1:These guidelines may not apply in all situations. Electromagnetic propagation is affected by absorption and reflection from structures, objects and people. | | | |

Table 6

| Guidance and manufacturer's declaration - electromagnetic emissions | | | |
|---|---|---|---|
| The Simplicity Cart is intended for use in the electromagnetic environment specified below. The customer or the user of the Simplicity Cart should assure that it is used in such an environment. | | | |
| Immunity test | IEC 60601 Test level | Compliance Level | Electromagnetic environment - guidance |
| Radiated RF<br>IEC 61000-4-3<br><br>Conducted RF<br>IEC 61000-4-6 | 3 V/m<br>80MHz to 2.5 GHz<br><br>150 kHz to 80 MHz | 3 V/m<br><br>3 Vrms | Portable and mobile RF communications equipment should be used no closer to any part of the Simplicity Cart including cables, than the Recommended separation distance calculated from the equation applicable to the frequency of the transmitter.<br><br>d = 1.7 √P 80 MHz to 800 MHz<br><br>d = 2.3 √P 800 MHz to 2.5 GHz<br><br>d = [3.5/V1] √P<br><br>Where P is the maximum output power rating of the transmitter in watts (W) according to the transmitter manufacturer and d is the recommended separation distance in meters (m).<br><br>Field strengths from fixed RF transmitters, as determined by an electromagnetic site survey, should be less than the compliance level in each frequency range.<br><br>Interference may occur in the vicinity of equipment marked with the following symbol: |
| NOTE 1 At 80 MHz and 800 MHz, the higher frequency range applies.<br><br>NOTE 2 These guidelines may not apply in all situations. Electromagnetic propagation is affected by absorption and reflection from structures, objects and people. | | | |
| [a] Field strengths from fixed transmitters, such as base stations for radio (cellular/cordless) telephones and land mobile radios, amateur radio, AM and FM radio broadcast and TV broadcast cannot be predicted theoretically with accuracy. To assess the electromagnetic environment due to fixed RF transmitters, an electromagnetic site survey should be considered. If the measured field strength in the location in which the Simplicity Cart is used exceeds the applicable RF compliance level above, the Simplicity Cart should be observed to verify normal operation. If abnormal performance is observed, additional measures may be necessary, such as reorienting or relocating the Simplicity Cart.<br>[b] Over the frequency range 150 kHz to 80 MHz, field strengths should be less than 3 V/m. | | | |

DentalEZ

# Simplicity® Cart
## Tubing Diagram

### COLOR CODE

RED = AIR
YELLOW = SIGNAL AIR (MASTER)
BLUE = COOLANT AIR
GREEN = WATER
BLACK = SIGNAL AIR (COOLANT WATER)
GRAY = VACUUM
CLEAR (PURPLE) = WATER OR DRAIN

### LEGEND

◁ AIR
◀ WATER
◀ VACUUM

*OPTIONAL EQUIPMENT

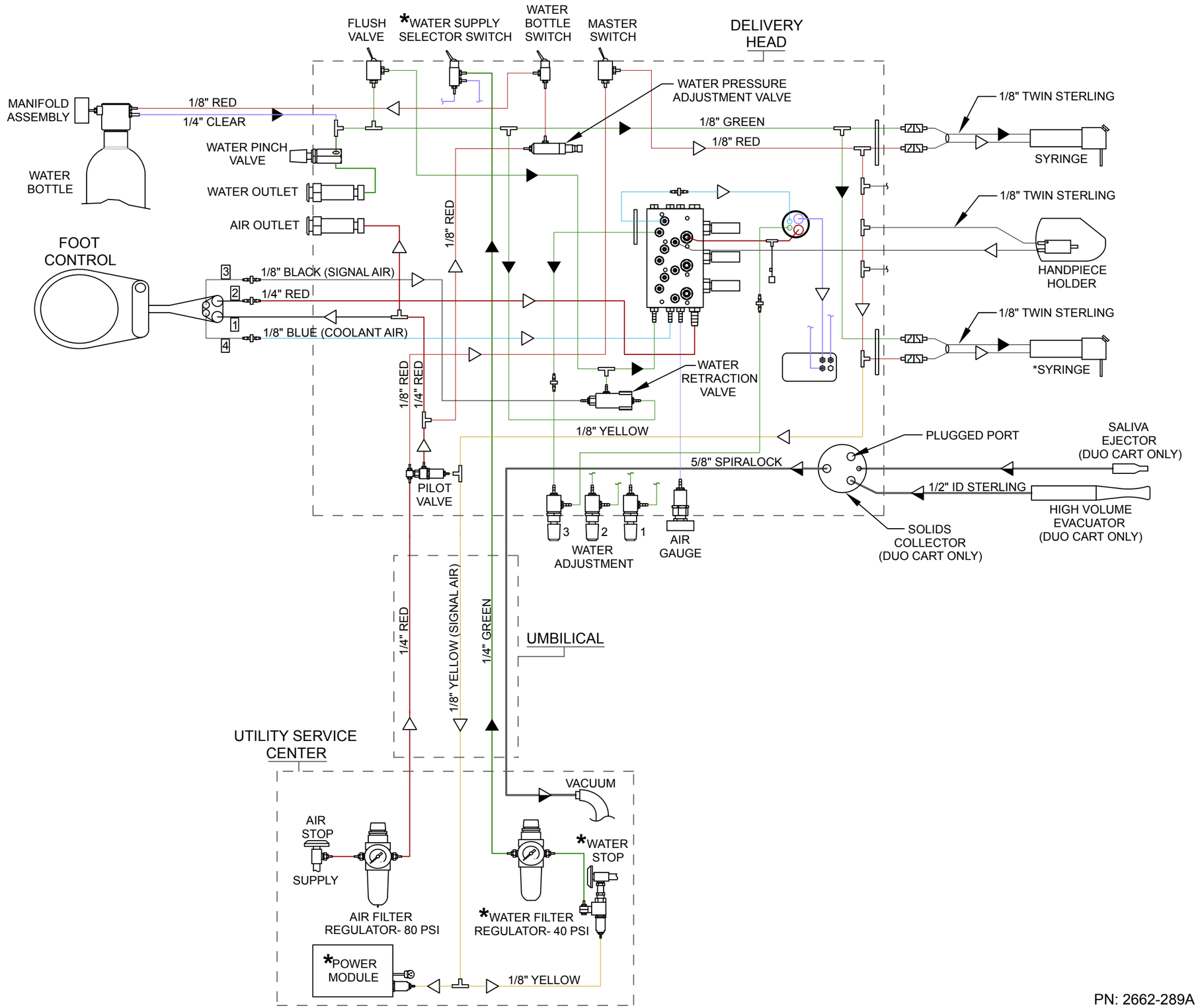


PN: 2662-289A

2500 Highway 31 South
Bay Minette, Alabama 36507
1-866-DTE-INFO
Fax: (251) 937-0461
www.dentalez.com

© DentalEZ Alabama, Inc.
Printed in USA

PN: 2717-258A
October, 2014